DocuSign Envelope ID: 48716AF9-1B10-47EE-B9CD-C629105D2DF8

4/11/2018 12:55:34 PM G:\Projects\2016\Division 5 (Mott Macdonald)\B-5682 Granville #129 (105 33BBU 2BMR)\Structures\Drawings\Final\401_B5682_SMU_EB.dgn

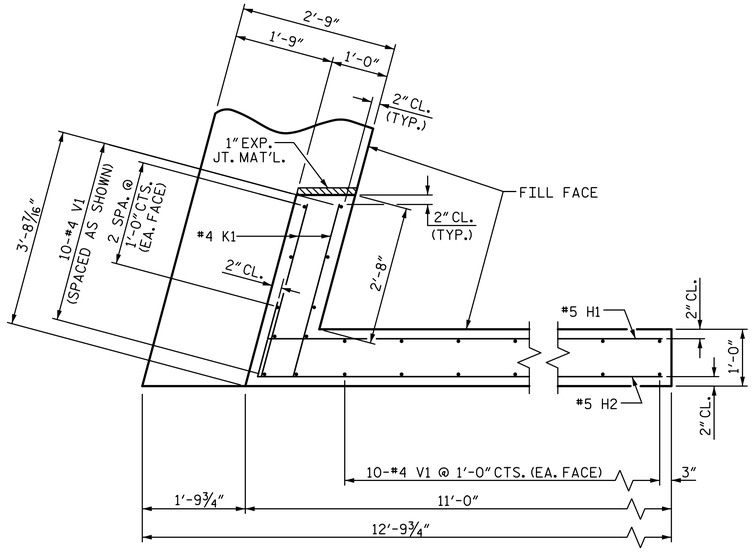

PLAN OF WING (W1)

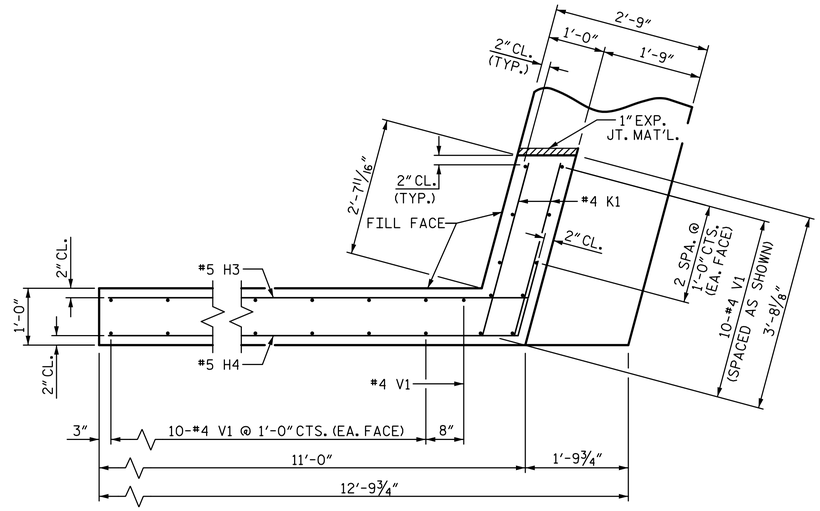

PLAN OF WING (W2)

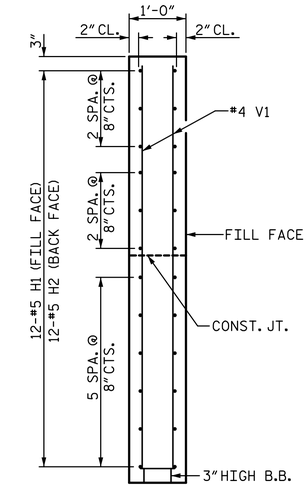

SECTION X-X

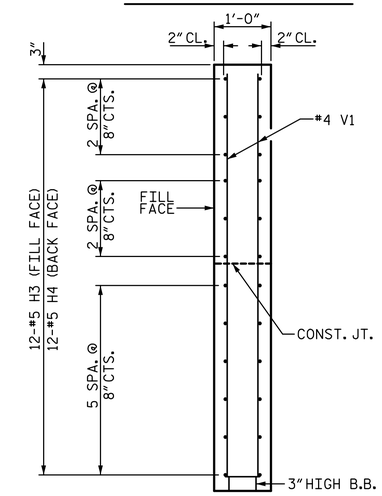

SECTION Y-Y

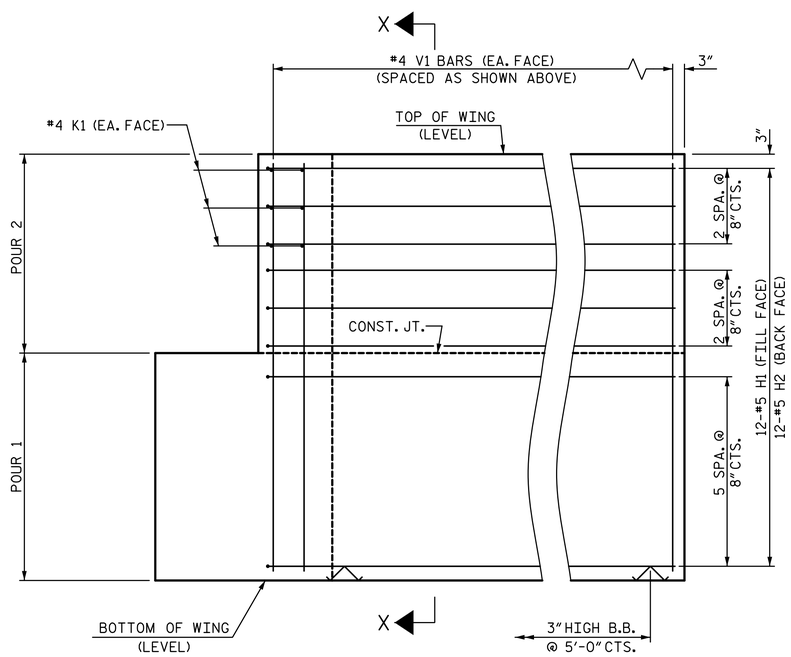

ELEVATION OF WING (W1)

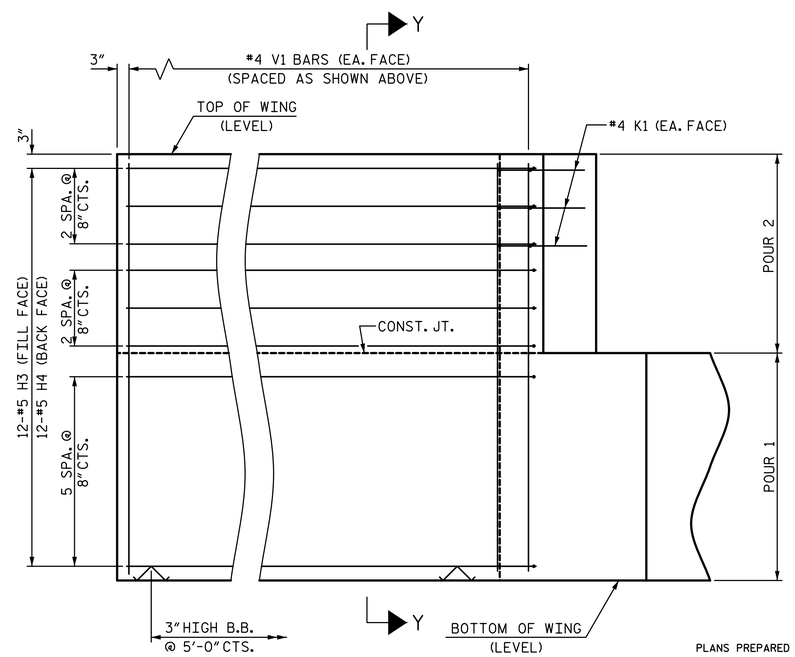

ELEVATION OF WING (W2)

WING DETAILS

PROJECT NO. B-5682
GRANVILLE COUNTY
STATION: 14+55.00 -L-

SHEET 3 OF 4

STATE OF NORTH CAROLINA
DEPARTMENT OF TRANSPORTATION
RALEIGH
SUBSTRUCTURE

END BENT
WING DETAILS

PLANS PREPARED BY:
SIMPSON ENGINEERS & ASSOCIATES
5640 Dillard Drive
Suite 200
Cary, NC 27518
(919) 852-0468
(919) 852-0598 (Fax)
www.simpsonengr.com
LICENSURE NO. C-2521

NORTH CAROLINA PROFESSIONAL SEAL 11268 ENGINEER BETSY S. COX
4/11/2018

DOCUMENT NOT CONSIDERED FINAL
UNLESS ALL SIGNATURES COMPLETED

DRAWN BY:	S.D. COOPER	DATE:	4-18
CHECKED BY:	B.S. COX	DATE:	4-18
DESIGN ENGINEER OF RECORD:	B.S. COX	DATE:	4-18

REVISIONS								SHEET NO.
NO.	BY:	DATE:	NO.	BY:	DATE:			S-15
1			3					TOTAL SHEETS
2			4					19