DocuSign Envelope ID: 48716AF9-1B10-47EE-B9CD-C629105D2DF8

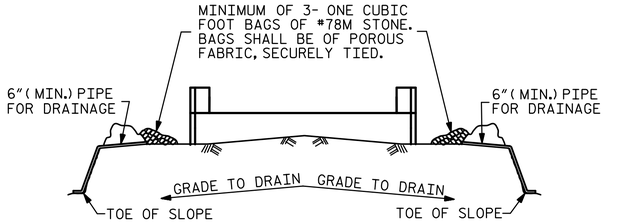

BAGGED STONE AND PIPE SHALL BE PLACED IMMEDIATELY AFTER COMPLETION OF END BENT EXCAVATION. PIPE MAY BE EITHER CONCRETE, CORRUGATED STEEL, CORRUGATED ALUMINUM ALLOY, OR CORRUGATED PLASTIC. PERFORATED PIPE WILL NOT BE ALLOWED.

BAGGED STONE SHALL REMAIN IN PLACE UNTIL THE ENGINEER DIRECTS THAT IT BE REMOVED. THE CONTRACTOR SHALL REMOVE AND DISPOSE OF SILT ACCUMULATIONS AT BAGGED STONE WHEN SO DIRECTED BY THE ENGINEER. BAGS SHALL BE REMOVED AND REPLACED WHENEVER THE ENGINEER DETERMINES THAT THEY HAVE DETERIORATED AND LOST THEIR EFFECTIVENESS.

NO SEPARATE PAYMENT WILL BE MADE FOR THIS WORK AND THE ENTIRE COST OF THIS WORK SHALL BE INCLUDED IN THE UNIT CONTRACT PRICE BID FOR THE SEVERAL PAY ITEMS.

TEMPORARY DRAINAGE AT END BENT

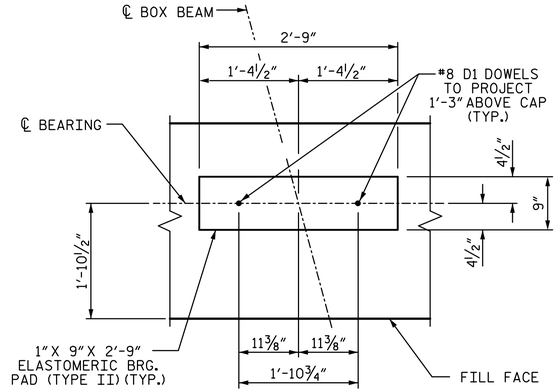

DETAIL "A"

(END BENT 1 SHOWN, END BENT 2 SIMILAR BY ROTATION)

BAR TYPES

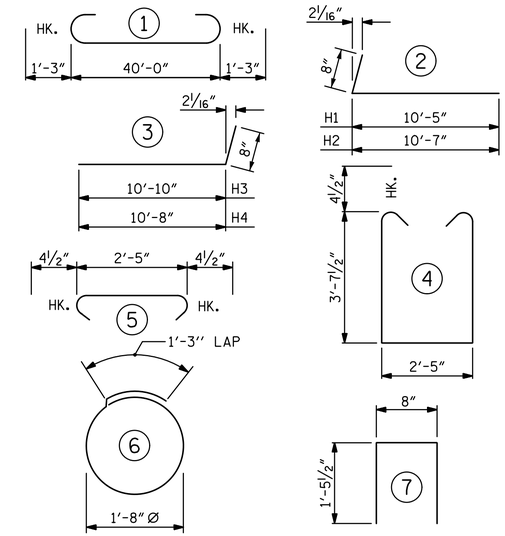

ALL BAR DIMENSIONS ARE OUT TO OUT.

BILL OF MATERIAL
FOR ONE END BENT

BAR	NO.	SIZE	TYPE	LENGTH	WEIGHT
B1	8	#9	1	42'-6"	1156
B2	28	#4	STR	21'-4"	399
B3	10	#4	STR	2'-5"	16
D1	22	#8	STR	2'-3"	132
H1	12	#5	2	11'-1"	139
H2	12	#5	2	11'-3"	141
H3	12	#5	3	11'-6"	144
H4	12	#5	3	11'-4"	142
K1	12	#4	STR	3'-3"	26
K2	12	#4	STR	21'-4"	171
S1	52	#4	4	10'-5"	362
S2	52	#4	5	3'-2"	110
S3	28	#4	6	6'-6"	122
U1	34	#4	7	3'-7"	81
V1	61	#4	STR	7'-2"	292
V2	68	#4	STR	5'-3"	238

REINFORCING STEEL (FOR ONE END BENT) 3671 LB

CLASS A CONCRETE BREAKDOWN (FOR ONE END BENT)

POUR 1	CAP, LOWER PART OF WINGS & COLLARS	20.7 CY
POUR 2	BACKWALL & UPPER PART OF WINGS	5.5 CY
TOTAL CLASS A CONCRETE		26.2 CY

END BENT 1		END BENT 2	
HP 12 X 53 STEEL PILES		HP 12 X 53 STEEL PILES	
NO: 7	LF = 105	NO: 7	LF = 125
STEEL PILE POINTS	NO: 7	STEEL PILE POINTS	NO: 7
PILE DRIVING EQUIPMENT SETUP FOR HP 12 X 53 STEEL PILES	EA: 7	PILE DRIVING EQUIPMENT SETUP FOR HP 12 X 53 STEEL PILES	EA: 7

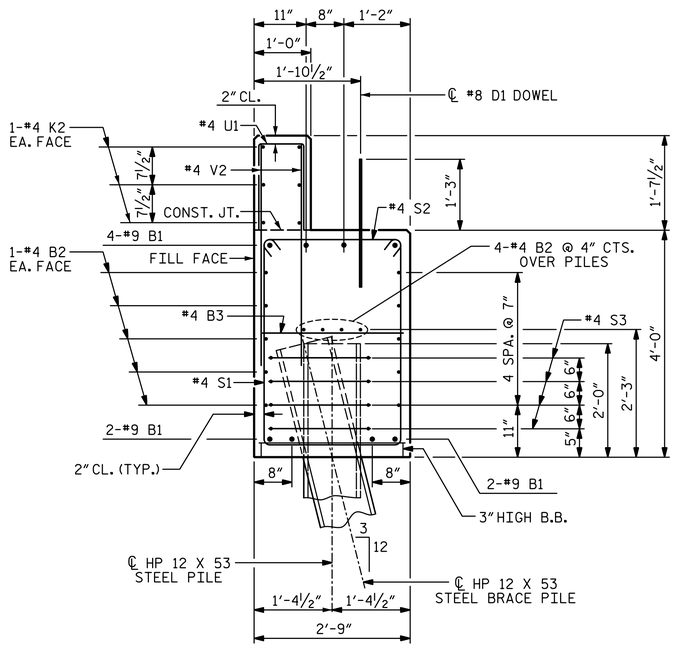

SECTION A-A

(CONCRETE COLLAR NOT SHOWN FOR CLARITY. SEE "CORROSION PROTECTION FOR STEEL PILES DETAIL.")

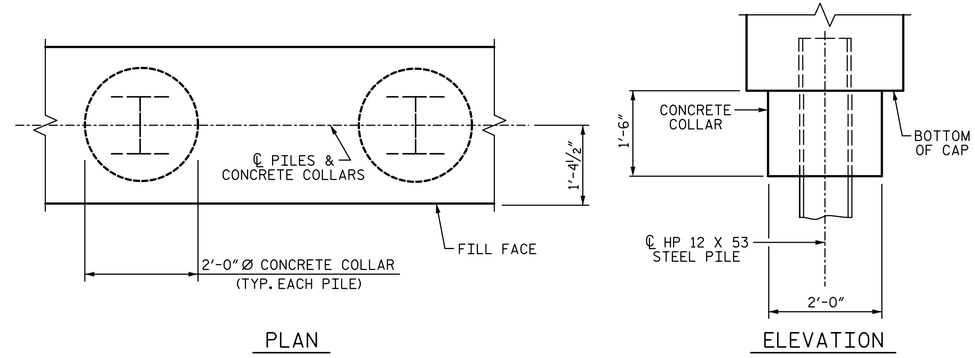

PLAN

ELEVATION

CORROSION PROTECTION FOR STEEL PILES DETAIL

(END BENT 1 SHOWN, END BENT 2 SIMILAR BY ROTATION)

PROJECT NO. B-5682

GRANVILLE COUNTY

STATION: 14+55.00 -L-

SHEET 4 OF 4

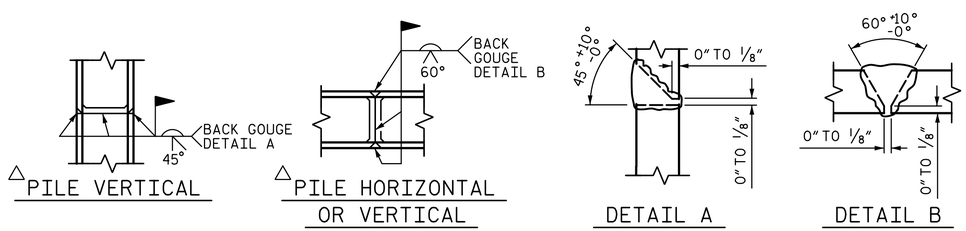

PILE SPLICE DETAILS

△ POSITION OF PILE DURING WELDING.

PLANS PREPARED BY:

SIMPSON ENGINEERS & ASSOCIATES
5640 Dillard Drive
Suite 200
Cary, NC 27518
(919) 852-0468
(919) 852-0598 (Fax)
www.simpsonengr.com
LICENSURE NO. C-2521

NORTH CAROLINA PROFESSIONAL SEAL 11268 ENGINEER BETSY S. COX
4/11/2018

DOCUMENT NOT CONSIDERED FINAL UNLESS ALL SIGNATURES COMPLETED

STATE OF NORTH CAROLINA
DEPARTMENT OF TRANSPORTATION
RALEIGH

SUBSTRUCTURE

END BENT 1 & 2 DETAILS

REVISIONS								SHEET NO.
NO.	BY:	DATE:	NO.	BY:	DATE:			S-16
1			3					TOTAL SHEETS
2			4					19

DRAWN BY: S.D. COOPER DATE: 4-18
CHECKED BY: B.S. COX DATE: 4-18
DESIGN ENGINEER OF RECORD: B.S. COX DATE: 4-18

4/11/2018 12:55:34 PM G:\Projects\2016\Division 5 (Mott Macdonald)\B-5682 Granville #129 (105 33BBU 2BMR)\Structures\Drawings\Final\401_B5682_SMU_EB.dgn