DocuSign Envelope ID: 48716AF9-1B10-47EE-B9CD-C629105D2DF8

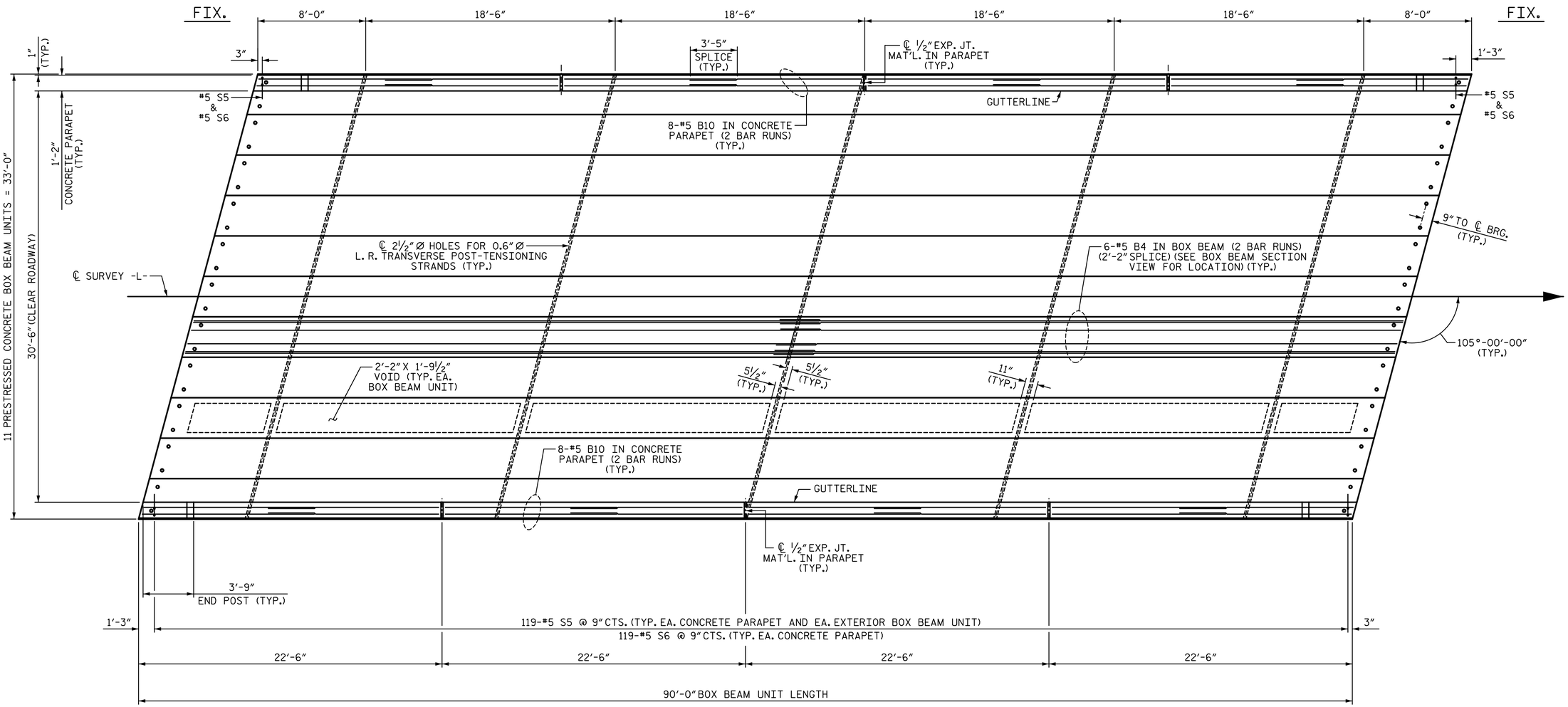

PLAN OF SPAN A

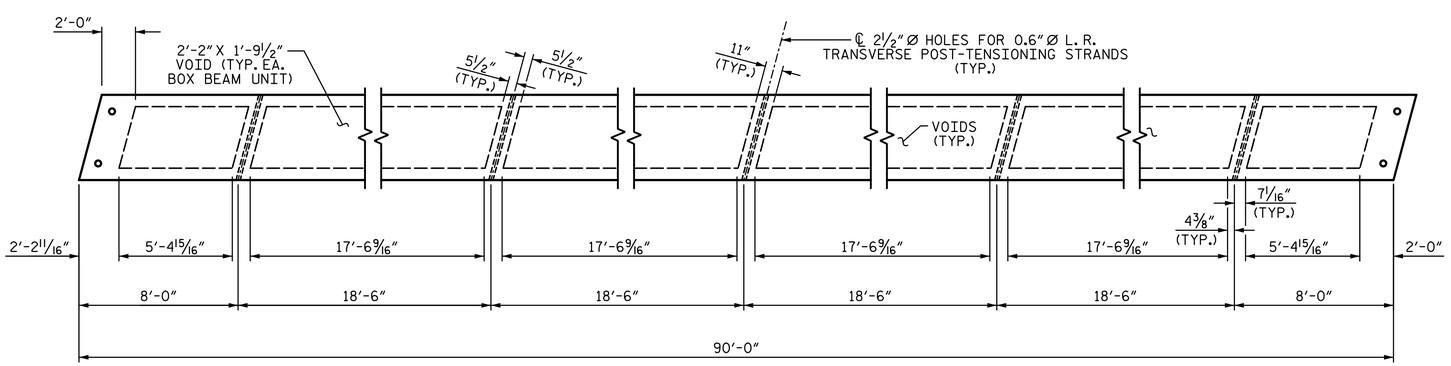

DIAPHRAGM AND VOID LAYOUT

PROJECT NO. B-5682
GRANVILLE COUNTY
STATION: 14+55.00 -L-

SHEET 2 OF 4

STATE OF NORTH CAROLINA
DEPARTMENT OF TRANSPORTATION
RALEIGH
SUPERSTRUCTURE

PLAN OF SPAN A (90'-0" UNIT) 30'-6" CLEAR ROADWAY

105° SKEW

PLANS PREPARED BY:
SIMPSON ENGINEERS & ASSOCIATES
5640 Dillard Drive
Suite 200
Cary, NC 27518
(919) 852-0468
(919) 852-0598 (Fax)
www.simpsonengr.com
LICENSURE NO. C-2521

NORTH CAROLINA PROFESSIONAL SEAL 11268 ENGINEER BETSY S. COX
4/11/2018

DOCUMENT NOT CONSIDERED FINAL UNLESS ALL SIGNATURES COMPLETED

REVISIONS						SHEET NO.
NO.	BY:	DATE:	NO.	BY:	DATE:	S-5
1			3			TOTAL SHEETS
2			4			19

DRAWN BY: S.D. COOPER DATE: 4-18
CHECKED BY: B.S. COX DATE: 4-18
DESIGN ENGINEER OF RECORD: B.S. COX DATE: 4-18

4/11/2018 12:55:32 PM G:\Projects\2016\Division 5 (Mott Macdonald)\B-5682 Granville #129 (105 33BBU 2BMR)\Structures\Drawings\Final\401_B5682_SMU_SUPER.dgn