DocuSign Envelope ID: 48716AF9-1B10-47EE-B9CD-C629105D2DF8

4/11/2018 12:55:33 PM G:\Projects\2016\Division 5 (Mott Macdonald)\B-5682 Granville #129 (105 33BBU 2BMR)\Structures\Drawings\Final\401_B5682_SMU_SUPER.dgn

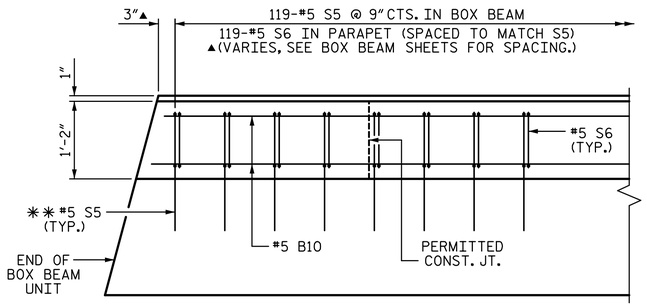

PLAN OF PARAPET

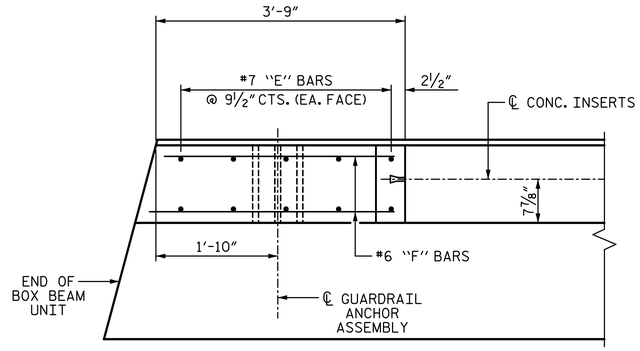

PLAN OF END POST

BAR TYPES

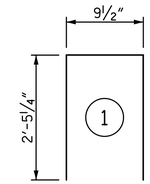

BILL OF MATERIAL

PARAPET AND END POSTS

BAR	NO.	SIZE	TYPE	LENGTH	WEIGHT
✱B10	128	#5	STR	12'-11"	1724
✱E1	8	#7	STR	2'-11"	48
✱E2	8	#7	STR	3'-4"	55
✱E3	8	#7	STR	3'-10"	63
✱E4	8	#7	STR	4'-4"	71
✱E5	8	#7	STR	4'-9"	78
✱F1	8	#6	STR	1'-11"	23
✱F2	4	#6	STR	3'-1"	19
✱F3	4	#6	STR	3'-7"	22
✱F4	4	#6	STR	3'-4"	20
✱F5	4	#6	STR	3'-10"	23
✱S6	238	#5	1	5'-8"	1407
✱EPOXY COATED REINFORCING STEEL					3553 LB
CLASS AA CONCRETE					22.1 CY
1'-2" X 2'-10" CONCRETE PARAPET					180.0 LF

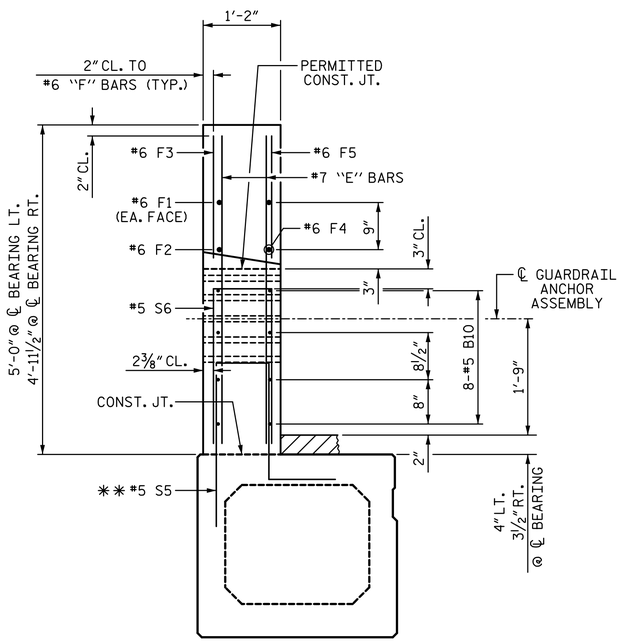

END VIEW

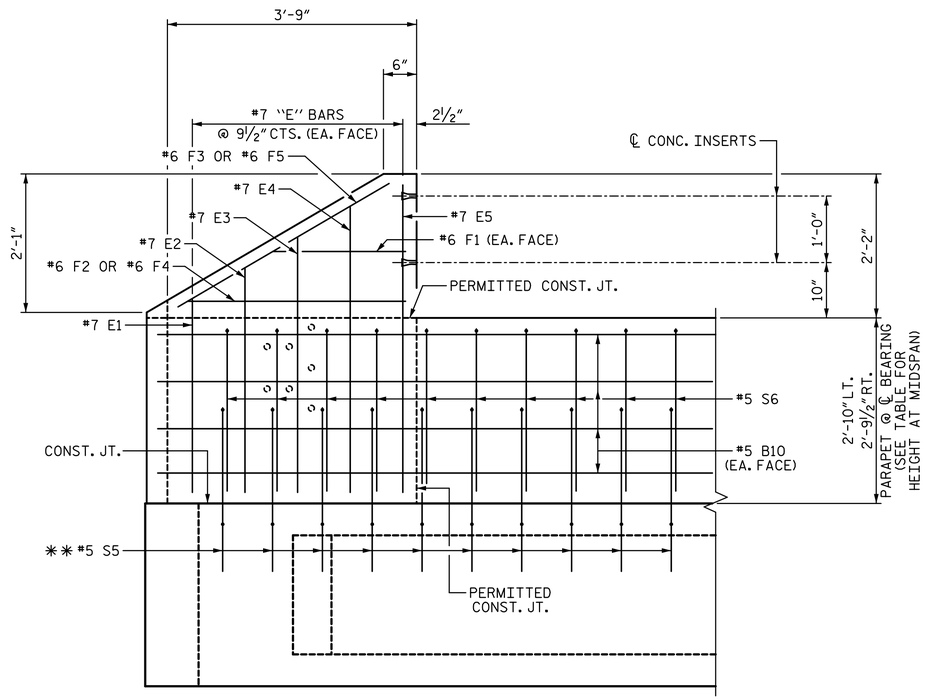

ELEVATION

PARAPET AND END POST FOR TWO BAR RAIL

✱✱#5 S5 BARS ARE INCLUDED IN BILL OF MATERIAL FOR BOX BEAM

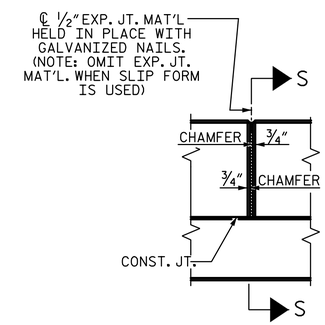

ELEVATION AT EXPANSION JOINTS

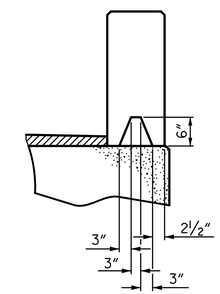

SECTION S-S

AT DAM IN OPEN JOINT (THIS IS TO BE USED ONLY WHEN SLIP FORM IS USED)

GUTTERLINE ASPHALT THICKNESS & PARAPET HEIGHT

	ASPHALT OVERLAY THICKNESS @ MID-SPAN		PARAPET HEIGHT @ MID-SPAN	
90' UNITS	LT	RT	LT	RT
	2"	1½"	2'-8"	2'-7½"

PROJECT NO. B-5682

GRANVILLE COUNTY

STATION: 14+55.00 -L-

STATE OF NORTH CAROLINA
DEPARTMENT OF TRANSPORTATION
RALEIGH

SUPERSTRUCTURE

CONCRETE PARAPET DETAILS FOR 2 BAR METAL RAIL

PLANS PREPARED BY:
SIMPSON ENGINEERS & ASSOCIATES
5640 Dillard Drive
Suite 200
Cary, NC 27518
(919) 852-0468
(919) 852-0598 (Fax)
www.simpsonengr.com
LICENSURE NO. C-2521

NORTH CAROLINA PROFESSIONAL SEAL 11268 ENGINEER BETSY S. COX
4/11/2018

DOCUMENT NOT CONSIDERED FINAL UNLESS ALL SIGNATURES COMPLETED

REVISIONS							
NO.	BY:	DATE:	NO.	BY:	DATE:	SHEET NO.	S-8
1			3			TOTAL SHEETS	19
2			4				

DRAWN BY:	S.D. COOPER	DATE:	4-18
CHECKED BY:	B.S. COX	DATE:	4-18
DESIGN ENGINEER OF RECORD:	B.S. COX	DATE:	4-18