DocuSign Envelope ID: F3A4A94C-FDCB-4781-89ED-461F23A0265F

PROJECT REFERENCE NO.	SHEET NO.
B-5682 - GRANVILLE 129	2C-1
DOCUMENT NOT CONSIDERED FINAL UNLESS ALL SIGNATURES COMPLETED	

STATE OF
NORTH CAROLINA
DEPT. OF TRANSPORTATION
DIVISION OF HIGHWAYS
RALEIGH, N.C.

ROADWAY DETAIL DRAWING FOR
GUARDRAIL INSTALLATION

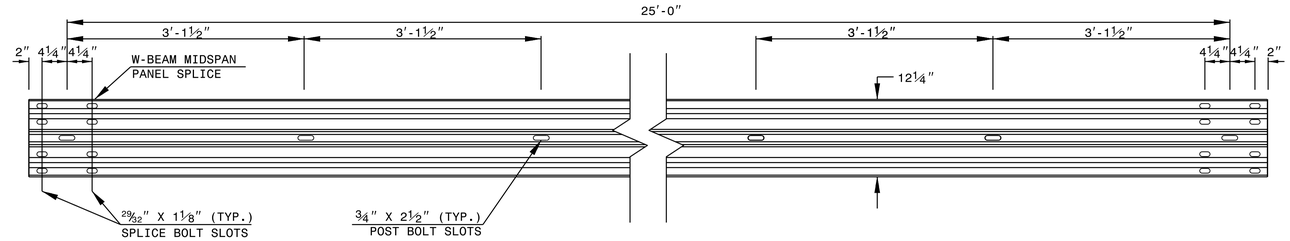

STANDARD W-BEAM GUARDRAIL

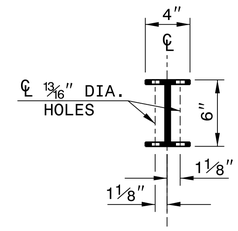

PLAN

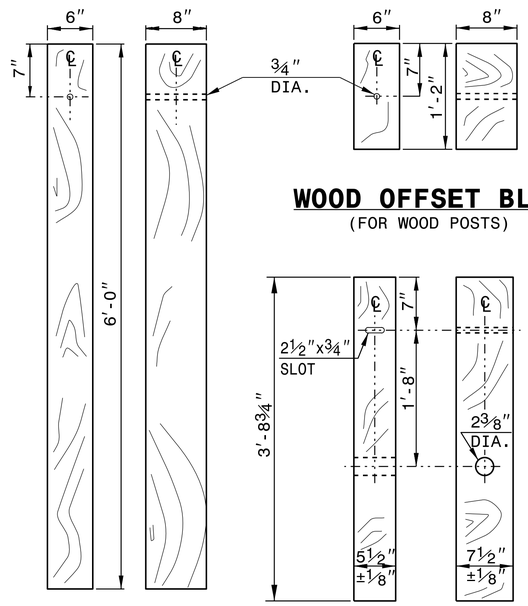

STANDARD LINE POST

WOOD OFFSET BLOCK
(FOR WOOD POSTS)

SHORT WOOD BREAKAWAY POST

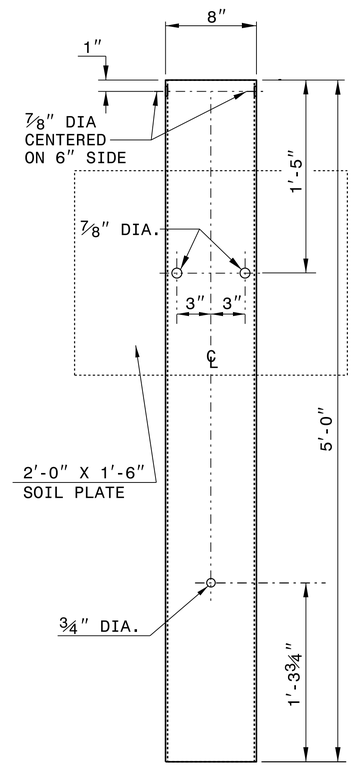

STEEL TUBE
TS 6"x8"x0.1875"

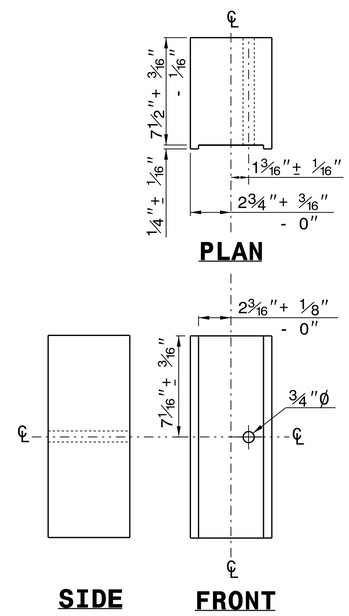

ROUTED OFFSET BLOCK

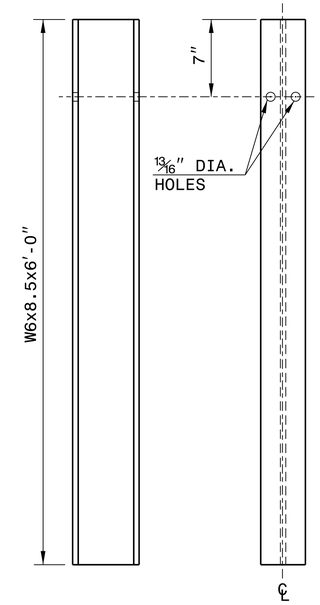

SIDE FRONT
"W6" STEEL POST

SYSTEM PARTS

SHEET 6 OF 8
862D02

STATE OF
NORTH CAROLINA
DEPT. OF TRANSPORTATION
DIVISION OF HIGHWAYS
RALEIGH, N.C.

ROADWAY DETAIL DRAWING FOR
GUARDRAIL INSTALLATION

SHEET 6 OF 8
862D02

NORTH CAROLINA PROFESSIONAL SEAL 022966 ENGINEER JOEL R. HOWERTON
4/12/2018

CONTRACTS STANDARDS AND DEVELOPMENT UNIT
Office 919-707-6950 FAX 919-250-4119

SEE TITLE BLOCK

ORIGINAL BY: J.HOWERTON DATE: 3-7-2018
MODIFIED BY: DATE:
CHECKED BY: DATE:
FILE SPEC.: